TS-G1730F/XIEL5 THF5790-B/VI

TS-G1730F

300 W MAX.

Flush-Mount Car Speaker 17 cm COAXIAL 3-WAY

Haut-Parleurs À Montage Encastré Pour Automobile 3 VOIES COAXIAL 17 cm

Be sure to read this instruction manual before installing this speaker.

Vor dem Einbau des Lautsprecher, verlehen Sie nicht diese Vorschrift zu lesen.

Prière de lire obligatoirement ce manuel d'installation avant de monter les haut-parleurs.

Prima di installare l'altoparlante leggete tassativamente le istruzioni.

Antes de instalar el altavoz es importante que lea estas instrucciones.

Leia este manual de instruções antes de instalar o alto-falante.

Обязательно прочитайте это руководство перед подключением динамика.

●HOW TO INSTALL ●EINBAU ●MODE D'INSTALLATION ●MODO DI INSTALLAZIONE ●INSTALACIÓN ●COMO INSTALAR ●КАК ПОДКЛЮЧИТЬ

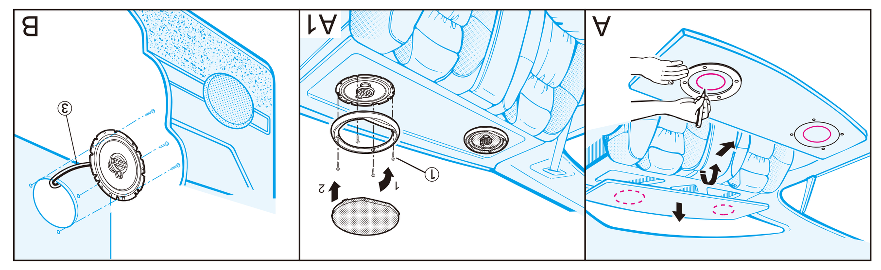

●PARTS INCLUDED ●MIT GELIEFERTES ZUBEHÖR ●PIÈCES COMPRISES ●PEZZI INCLUSI ●PIEZAS INCLUIDAS ●PEÇAS INCLUIDAS ●КОМПЛЕКТАЦИЯ

① ϕ4 mm×20 mm ×8
② ×8
③ 30 cm ×2

●DIMENSIONS ●GRÖßE ●DIMENSIONS ●DIMENSIONI ●DIMENSIONES ●DIMENSÃO ●РАЗМЕР

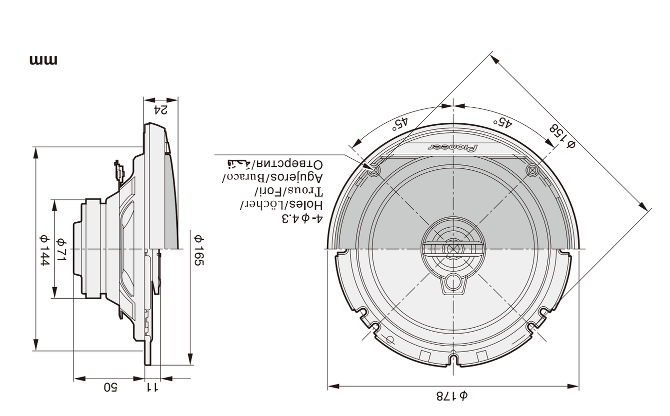

●CHARACTERISTIC ●MERKMALE ●CARACTERISTIQUE ●CARATTERISTICHE ●CARACTERÍSTICA ●CARACTERÍSTICA ●ХАРАКТЕРИСТИКИ

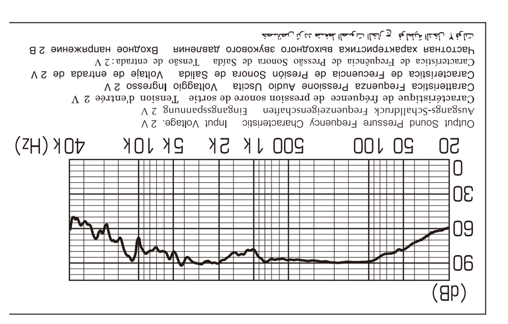

●SPECIFICATIONS
- Reproduction system .... Coaxial three way
- Speaker specifications
  Woofer .... ϕ165 mm
  Magnet : 157 g
  Midrange .... ϕ30 mm Balanced dome
  Tweeter .... ϕ10 mm Dome
- Nominal impedance .... 4 Ω
- Sensitivity .... 90 dB (±1.5 dB)
- Frequency response .... 36 Hz to 18 kHz (−20 dB)
- Maximum music power .... 300 W
- Nominal power .... 40 W
- Grille material .... Steel net, heat-proof resin
- Weight (per speaker including accessory parts) ...... 0.59 kg
- Gross weight (2 speakers including packaging) ...... 1.39 kg

©PIONEER CORPORATION 2017 28-8, Honkomagome 2-chome, Bunkyo-ku, Tokyo 113-0021, JAPAN / JAPON MADE IN VIETNAM FABRIQUÉ AU VIÊT-NAM FABBRICATO IN VIETNAM FEITO NO VIETNÃ СДЕЛАНО В ВЬЕТНАМЕ
PIONEER EUROPE NV Haven 1087, Keetberglaan 1, B-9120 Melsele, Belgium / Belgio / Belgique

Pioneer

TS-G1730F

HP 3 VOIES

- PUISSANCE MUSICALE MAXIMUM 300 W
- PUISSANCE NOMINALE 40 W
- HP GRAVE Ø165 mm
- HP MÉDIUM Ø30 mm DÔME ÉQUILIBRÉ
- HP AIGU Ø10 mm DÔME
- IMPÉDANCE 4 OHMS
- SENSIBILITE 90 dB (±1,5 dB)
- BANDE PASSANTE 36 Hz À 18 kHz (− 20 dB)
- POIDS BRUT 1,39 kg

Wide Application

Ces produits ont été conçus pour reproduire un son de qualité et pour s'installer dans un grand nombre de véhicules.

- Membrane renforcée Mica IMPP
- Suspension caoutchouc haute performance
- Bobine haute résistance

Pioneer

TS-G1730F

HP 3 VOIES

INJECTION MOLDED CONE

Pioneer

300 W MAX

17 cm / 6¾"

Wide Application

TS-G1730F

3-WAY SPEAKER / HP 3 VOIES
DIFFUSORE 3 VIE / ALTO-FALANTE 3 VIAS
3-ПОЛОСНЫЙ ДИНАМИК

INJECTION MOLDED CONE ™

8 84938 37349 4

XIEL5
1 PAIR/PAIRE

PAP

PIONEER CORPORATION

TS-G1730F
3-WAY SPEAKER
3-ПОЛОСНЫЙ ДИНАМИК

INJECTION MOLDED CONE

Pioneer

THF5790-B/VI
THF5790-B/VI
THF5790-B/VI
THF5790-B/VI
THF5790-B/VI

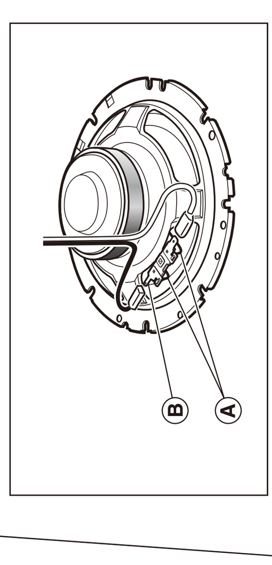

TS-G1730F

INJECTION MOLDED CONE ™

3-WAY SPEAKER

- MAX. MUSIC POWER 300 W
- NOMINAL POWER 40 W
- WOOFER Ø165 mm
- MIDRANGE Ø30 mm BALANCED DOME
- TWEETER Ø10 mm DOME
- IMPEDANCE 4 OHMS
- SENSITIVITY 90 dB (±1.5 dB)
- FREQUENCY RESPONSE 36 Hz TO 18 kHz (− 20 dB)
- GROSS WEIGHT 1.39 kg

Pioneer

Wide Application

These products are designed to produce high quality sound and easily fit into a variety of vehicles.

- Mica Reinforced IMPP Cone
- High Compliance Rubber Coated Cloth Surround
- Heat Resistant Voice Coil